Approval Sheet

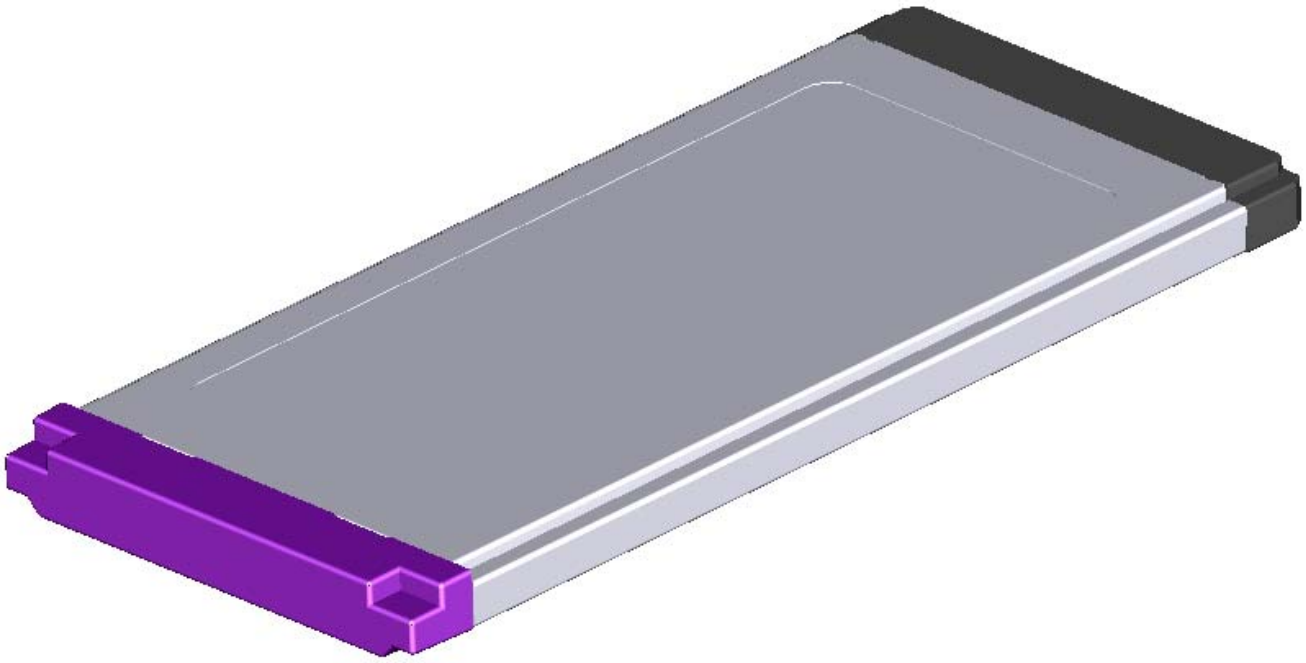

Customer :

Description : Express Card Into SSD

Project No. :

Customer No. :

BroadTek No. : E-211-025-111

Date. : 2008,2,30

BroadTek Technology Co., Ltd.

Tel :886-2-29642625 Fax: 886-2-29642601

4F.,No.15,Lane 163,Sinyi Rd .,Banciao City,Taipei County 220,Taiwan

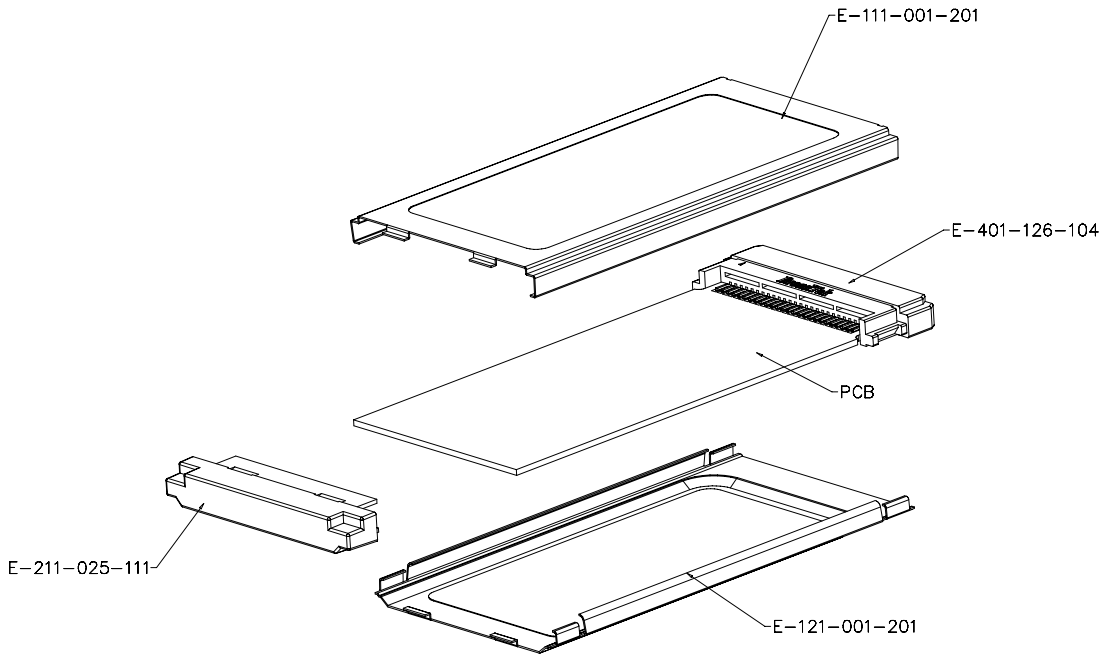

– Tolerances – Unless Otherwise Specified	
.0	±0.15
.00	±0.10
.000	±0.05
ANGLES	±1°

BroadTek

Approved: | Checked:

Engineer: | Drawn:

Title : Exploding view for component

Drawing NO. E-211-025-111-EXP

Part NO.

Unit:	Scale:	Size	Rev.	Sheet
mm	1:1	A4	01	

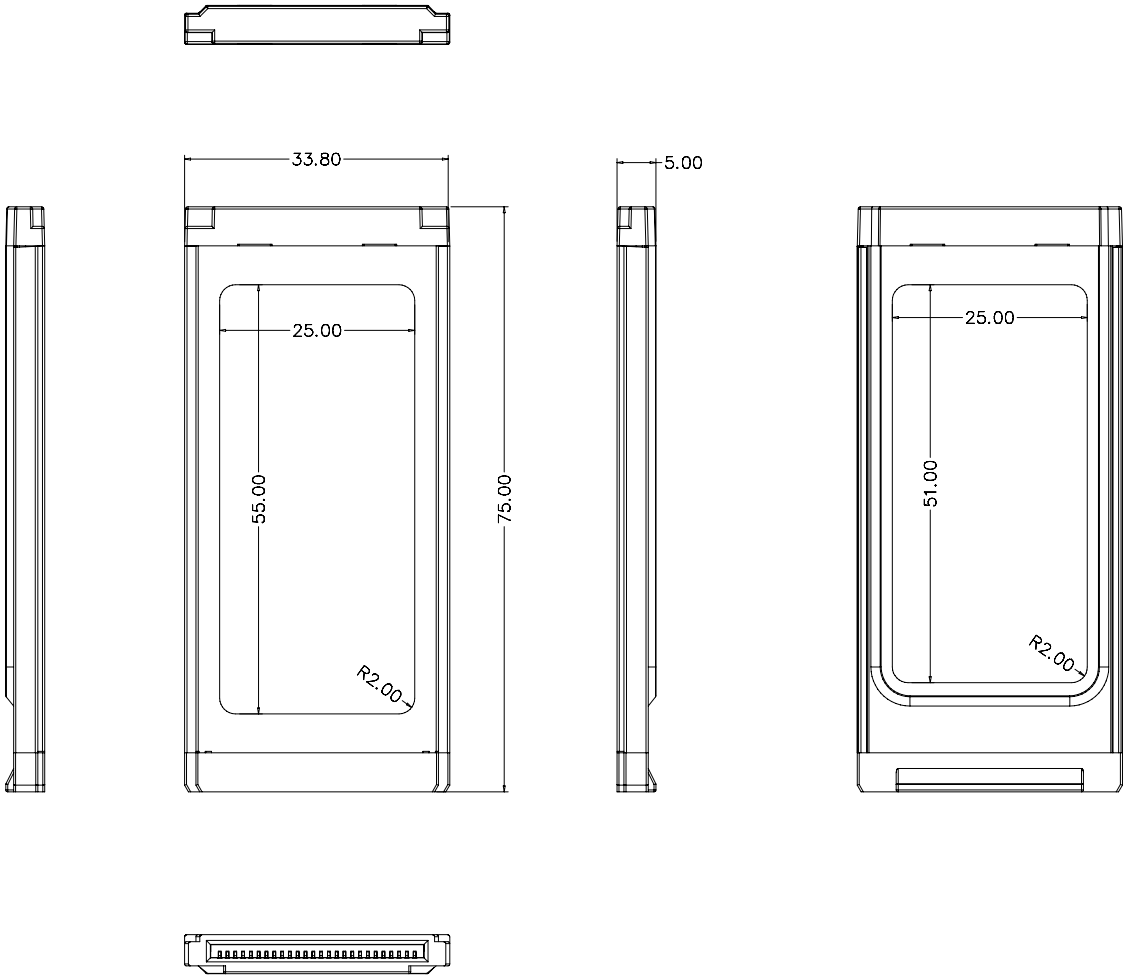

– Tolerances – Unless Otherwise Specified	
.0	±0.15
.00	±0.10
.000	±0.05
ANGLES	±1°

BroadTek

Approved:	Checked:
Engineer:	Drawn:

Title : Assembly

Drawing NO.	Part NO.
E-211-025-111-ALL	

Unit:	Scale:	Size	Rev.	Sheet
mm	1:1	A4	01	